1100MM NXT NEMESIS RACING

Overview

The fifth ROCHOBBY racing plane, 1100mm NXT Nemesis, is going to rock the market!

The NXT Nemesis, the fifth in the 1100 mm series of ROCHOBBY racing plane, is going to rock the market! The NXT Nemesis with its scaled streamlined appearance, cool red & white color scheme, as well as its powerful racing performance is based on the real plane prototype.The 1100 mm wingspan coupled with our powerful 3648-KV870 motor, heavy-duty 70A ESC, and 2-blade propeller will provide you racing plane performance out of the box. With its simple screw-together construction you will by going fast and turning left quickly. The 1100mm NXT Nemesis, with its stylish racing plane characteristics, will surely make it a standout at your flying field.

SPECIFICATION

Wingspan	1100mm/43.3in
Overall Length	1075mm/42.3 in
Flying Weight	1530g (47.9oz)
Motor Size	Brushless 3648-KV870
ESC	70A
Servo	9g digital metal gear Servo x 4, 9g servo x 2

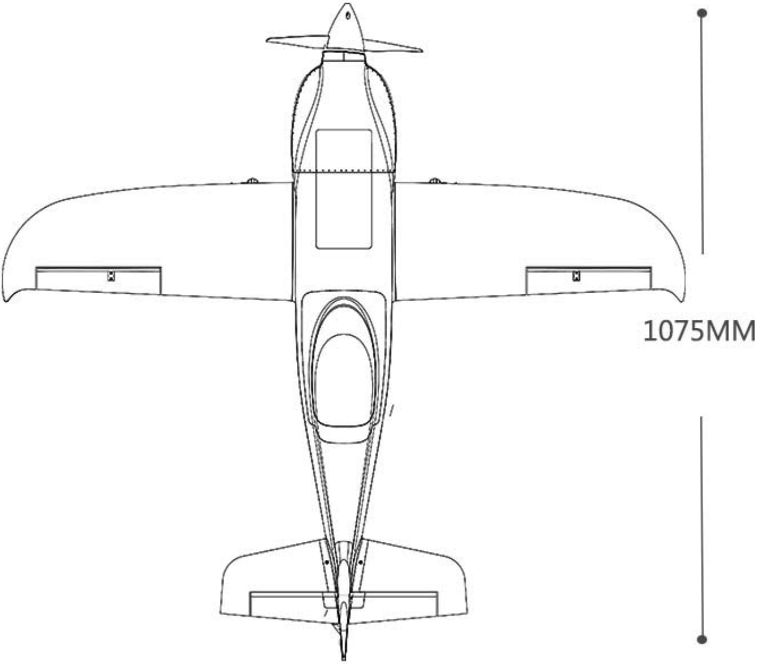

1100MM

PRODUCT DISPLAY

[illegible]

ROCRACE
66
ROCHOBBY

ROCRACE
66
ROCHOBBY

ROCHOBBY
66

ROCRACE
66
ROCHOBBY
ROCRACE

PRODUCT DETAILS

Fms

[illegible]

ROCHOBBY
66
ROCRACE

NO.1 Cool red & white color scheme.

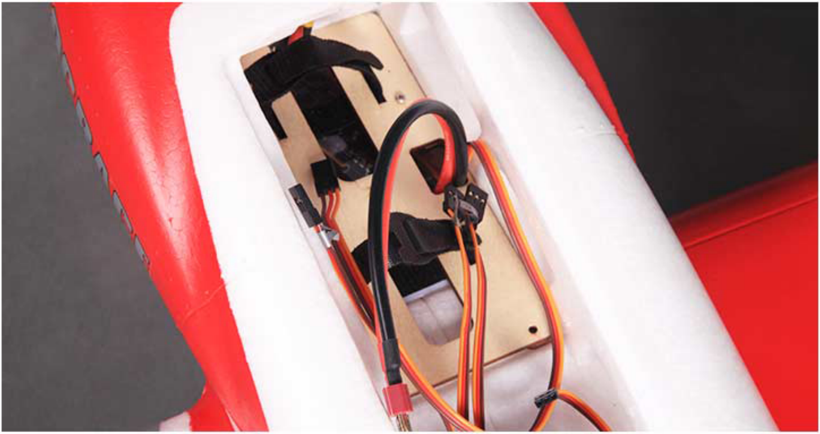

NO.2 Powerful Brushless 3648-KV870 motor combined with heavy-duty 70A ESC.

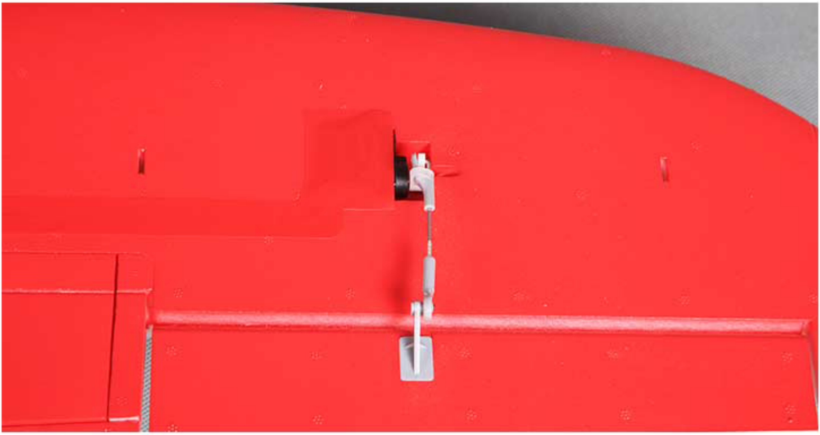

NO.3

Digital Metal gear servos on the ailerons, elevator and rudder for maximum durability.

NO.4

Can be tuned to reach speeds in excess of 100 mph (160 km/hr).

NO.5

Super scale appearance including hand painted pilot, chrome spinner, detailed cockpit, authentic.

NO.6

Simple construction with no glue required for assembly.

NO.7 Rugged electronic retractable landing gear with metal trunnions.

NO.8 Durable EPO foam with reinforced one-piece wing.

NO.9 Flaps for easier landings.

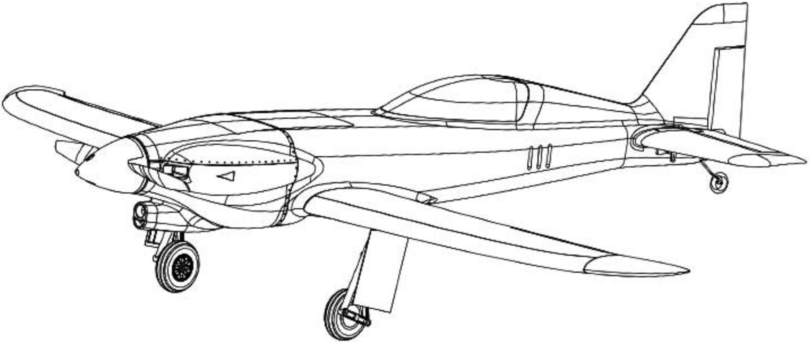

1100MM NXT